SHIFT

Collection

Furniture for Outsiders.™

Shift is a Philadelphia-based independent design brand creating a new generation of American-made furniture and accessories.

Shift develops and produces original designs by architects stoked by curiosity in materials, people and the places they inhabit. Expressive form, mindful materials and deliberate details allow the line to endure elements and trends for life-long use.

Our fabrication and fulfillment are in the USA. We sell direct, through wholesale, and work closely with designers to offer customization and trade pricing for the line.

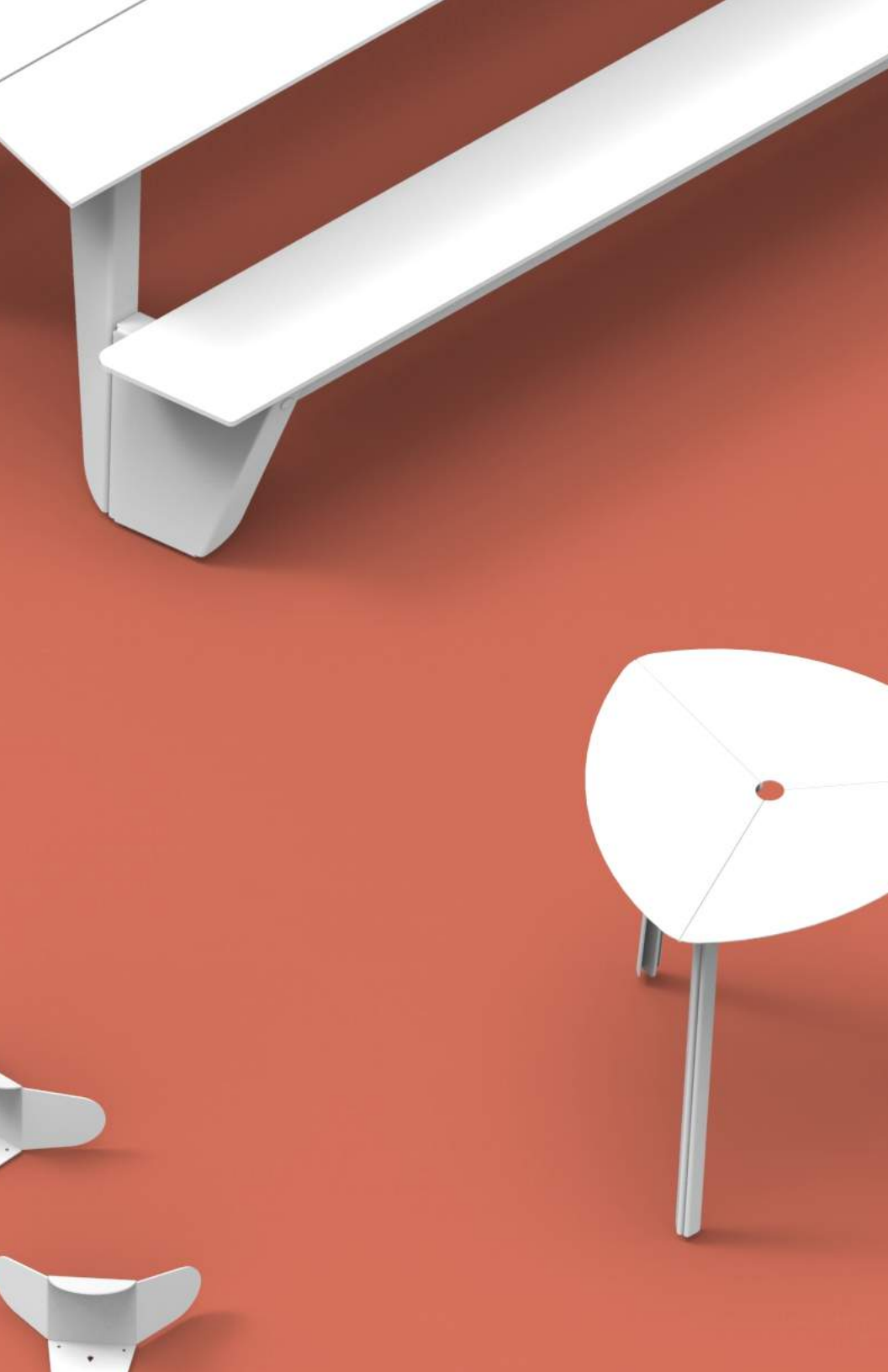

Collection

origin	USA
dimensions	length: 84” | width: 51.5” | height: 29.5”
	seat depth: 10.75” | seat height: 16”
material	coated aluminum base, finished white oak top + benches,
	coated stainless hardware.
variants	matte black (49/80830) | white (38/10130)
optional	alternate wood | custom color coating

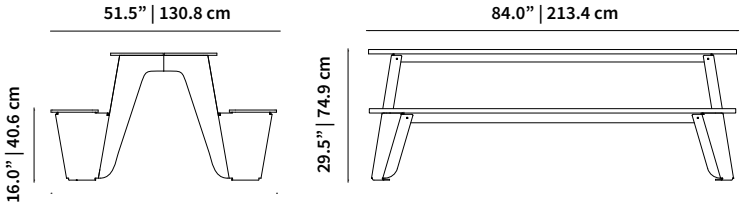

A versatile 6-8 person table built for gathering both indoor and outdoor.

Rambler Picnic Table

origin	USA
dimensions	length: 27.3” | width: 27.8” | height: 29.7”
material	powder coated aluminum
variants	white (49/11340) | matte black (49/80830)
optional	custom color coating

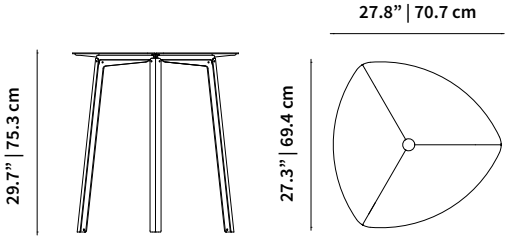

Third Bistro Table

A three-legged cafe table for 2-3 people built for public spaces and sidewalk cafes.

origin	USA
dimensions	length: 25.1” | width: 8.7” | height: 11.4”
material	powder coated aluminum, woven textile
variants	matte black (49/80830) / black bag
options	custom color coating + bag

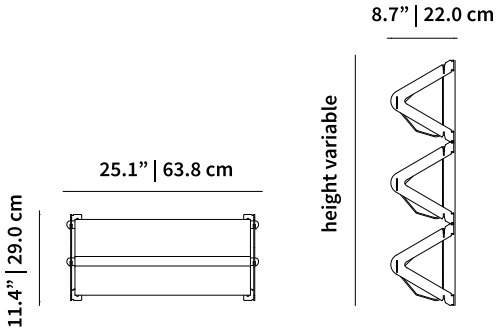

Tucker Wall Planter

An expandable, lightweight planter system suited for commercial use with a removable textile bag.

origin	USA
dimensions	length: 10.5” | width: 10.7” | height: 15.4”
material	powder coated aluminum, coated stainless steel hardware
options	custom color coating

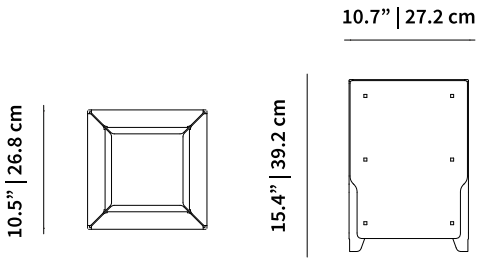

A short, geometrically pure planter designed for corners and stairs.

Bolton Short Planter

origin	USA
dimensions	length: 46.2” | width: 10.7” | height: 8.4”
material	powder coated aluminum, coated stainless steel hardware
options	custom color coating

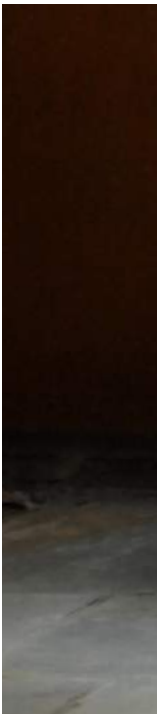

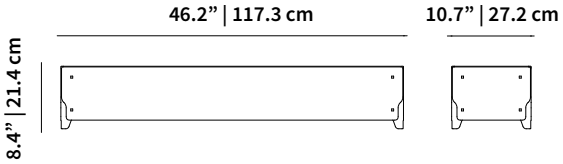

Bolton Low Planter

A low, wide planter designed to define a border on the patio, street or stoop.

origin	USA
dimensions	length: 14” | width: 14” | height: 46.2”
material	powder coated aluminum, coated stainless steel hardware
options	custom color coating

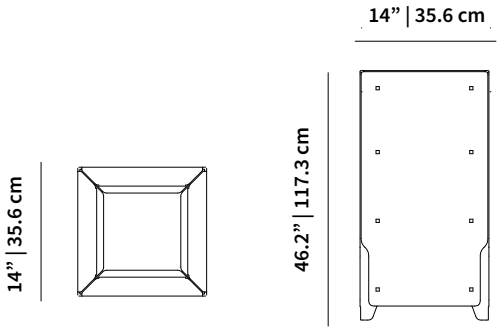

Bolton Tall Planter

A tall planter featuring contrast bolts and a deep planting area.

A sculptural aluminum hook to coil your garden hose or EV cable on.

Wylie Hose Reel

origin	USA
dimensions	length: 14.2” | width: 7.6” | height: 12.8”
	hose bed: 6”x6” | back panel: 8”
material	powder coated aluminum
variants	silver (49/93061) | matte black (49/80830)
	white (49/11340)
optional	custom color coating

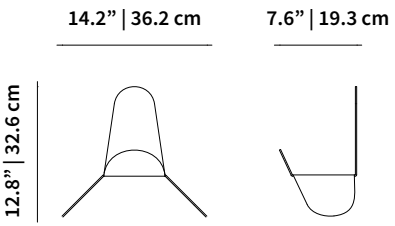

A contemporary play on the classic pitched birdfeeder. Your yard'll be the talk of the flock.

Beekman Bird Feeder

origin	USA
dimensions	length: 12” | width: 10.6” | height: 7.6”
material	powder coated aluminum, walnut dowel, nylon cord
variants	white (49/11340) | yellow (49/21830)
optional	custom color coating

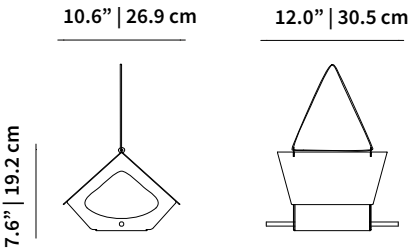

Modular wall tiles form a graphic trellis that adds visual texture and a climbing structure for vines. Comes 4 to a set.

Pattison Tile Trellis

origin	USA
dimensions	length: 8.2” | width: 1.6” | height: 13.1”
material	uncoated aluminum
variants	n/a

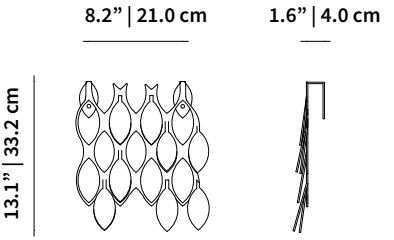

origin	USA
dimensions	length: 15.2” | width: 15.2” | height: 4.7”
material	uncoated aluminum, burlap, filter fabric, epdm rubber feet
variants	n/a

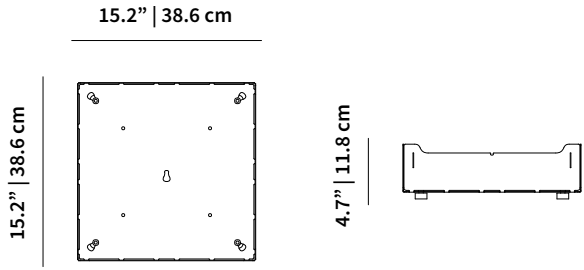

Fairmount Tile Planter

A flat-packed aluminum tile planter for building lightweight, modular gardens in private and public spaces. Comes 4 to a set.

Fitzwater Rain Tank

A monolithic stainless steel rain tank featuring knockouts for flexible placement and a lid that allows for winterization.

origin	USA
dimensions	length: 25.1” | width: 12.1” | height: 62.2”
	capacity: 58 gallons | base height: 14.1”
material	stainless steel, galvanized steel hardware
finish	#4 polish stainless steel

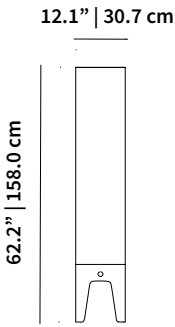

Design / Layout
Shift Space Design

Photography
Tim Barnes
William May

Shift Studio + Showroom
3060 W Jefferson Street
Philadelphia, PA 19121
United States

Sales
sales@shiftmakes.com
+1 (267) 536-5321

www.shiftmakes.com

www.shiftmakes.com